Volume 2, Issue 2, February 2017 ISSN (online): 2456-0006

International Journal of Science Technology Management and Research

Available online at: www.ijstmr.com

A Survey on a Unified Space Vector Pulse WidthModulation for Dual Two-Level Inverter System with Open End Winding AC Machine

Puja Zurale
PG, Student
Electrical Engineering Department,
Matoshri College of Engineering.Odha,
Nashik, MH, India

Ms. P. A. Desai
Assistant Professor
Electrical Engineering Department
Matoshri College of Engineering.Odha,
Nashik, MH, India

Prof. S. S. Khule
Assistant Professor and HOD
Electrical Engineering Department
Matoshri College of Engineering.Odha
Nashik, MH, India

Abstract: - A unified space vector pulse width modulation (USVPWM) and Alternate inverter pulse width modulation technique for a dual two-level inverter system with two isolated DC voltage sources is used for reducing the total harmonic distortion. The Unified SVPWM can obtain good performance for a wide speed range as compared to alternate inverter PWM. Unified SVPWM technique gives less Total Harmonic Distortion as com- pared to SVPWM and alternate inverter PWM technique. The gate pulses for the dual inverter are generated by the concept of one unified SVPWM in accordance with the voltage-second integral principle the ratio of the two DC-link voltages can be an arbitrary positive value also simplifies the region identification in sectors and reduces total switching frequency is reduced by 1/3 of the dual inverter SVPWM. PMSM motor with dual inverter is used in military application, electric vehicles, aerospace, due to their excellent performance such as high power density, high efficiency and good controllability, because the fault tolerant capability is improved by open end winding phenomenon and it prevent the circulation of zero sequence current.

Keywords: Dual-inverter, Unified space vector pulse width modulation (USVPWM), Switching frequency

I. INTRODUCTION

Open winding system has been widely investigated in the field of motor driving and power generation in the last few decades. By employing different combination of converters, the open winding system shows advantages over the conventional star or delta connected structure in many aspects, such as, reducing the DC bus voltage, achieving multilevel modulation effect, improving the operation performance of motors. However, a large amount of switch devices have to be used in the open winding system and resulting a complex converter structure, which will not only increase the system expense but also make it complex for the control implementation. In order to avoid the above drawbacks, a semi-controlled open winding system, by integrating a diode bridge and a voltage source converter (VSC), could take the advantages of the less active switch devices, the simpler system configuration and control complexity.

Two isolated DC buses are usually employed in the open winding system to control two converters. Nevertheless, a single DC bus supplied open winding system can take a simpler structure compared with isolated DC bus structure, which is also more convenient for the practical applications. However, a zero sequence current loop will occurring the open winding system when supplied by a common DC bus. The zero sequence currents owing through the stator windings will increase the system conduction losses and decrease the operation efficiency. Meanwhile, the heavier switch device burden and unexpected DC voltage fluctuation will occur Furthermore, due to that the triple back electromagnetic force (EMF) usually exists in the phase windings of permanent magnet synchronous generator

(PMSG). The zero sequence current also willing introduce six times frequency torque ripple. As a result, it is necessary to suppress the zero sequence current in the open winding PMSG system supplied by a single DC bus.

The SVPWM strategy employing those switching combinations that do not contribute to the zero-sequence is also introduced introduce the zero-sequence voltage. And also a carrier-based PWM algorithm is used in dual two-level inverters and dual matrix converters to eliminate common-mode voltage. However, due to the voltage drops on the power semiconductor devices and switching dead time, the zero- sequence voltage cannot be eliminated although these selected switching combinations are employed. Common-mode chokes and dead-time compensation strategies are proposed to suppress the zero-sequence current in.

- **Inverter**

An inverter is basically a device that converts electrical energy of DC form into that of AC. These DC-AC inverters have been widely used for industrial applications such as Uninterruptible Power Supply (UPS), AC motor drives etc. The inverters are also playing an important role in various renewable energy applications as these are used for grid connection of Wind Energy System or Photovoltaic System. In addition to this, the control strategies used in the inverters are also similar to those in DC -DC converters.

Types of Inverter

Inverters are broadly classified into 2 types:
1. Voltage Source Inverter (VSI) or Voltage Fed Inverter (VFI).
2. Current Source Inverter (CSI) or Current Fed Inverter (CFI).

Voltage Source Inverter (VSI)

A voltage source inverter (VSI) can also be called a voltage-fed inverter (VFI). It is the one in which dc source contains minor or insignificant internal impedance. The output voltage waveform and load are independent of each other. Because of this characteristic, the VSI has numerous industrial applications like in Power system for Flexible AC Transmission (FACTS) and adaptable or adjustable speed drives (ASD).

Current Source Inverter (CSI)

A current source Inverter (CSI), also called a current-fed inverter (CFI) requires adaptable current from a dc source of large internal impedance. Mostly the load does not impact the output current waveform. These are extensively employed in medium voltage industrial applications that need waveform of high quality.

II. LITERATURE SERVEY

“Fast Direct Torque Control of an Open-End Induction Motor Drive Using 12-Sided Polygonal Voltage Space Vectors" have presented However, the proposed Direct Torque Control (DTC) scheme selects switching vectors based on the sector information of the estimated fundamental stator voltage vector and its relative position with respect to the stator ux vector. The fundamental stator voltage estimation is based on the steady-state model of IM and the synchronous frequency of operation is derived from the computed stator ux using a low-pass filter technique. The proposed Direct Torque Control (DTC) scheme utilizes the exact positions of the fundamental stator voltage vector and stator ux vector to select the optimal switching vector for fast control of torque with small variation of stator ux within the hysteresis band. The present Direct Torque Control (DTC) scheme allows full load torque control with fast transient response to very low speeds of operation, with reduced switching frequency variation. Extensive experimental results are presented to show the fast torque control for speed of operation from zero to rated. [1].

“Theoretical and Experimental Analysis for Current in a Dual-Inverter-Fed Open-End Winding Induction Motor Drive With Reduced Switching PWM" have presented. The influence of different error volt seconds (affected with different PWM variants)on the motor phase current in the dual VSIis critically analysed .To this end, two analytical approaches(one using error-voltage trajectory information and the other using switching state information of the dual VSI) are also proposed in this paper to predict the current trajectory and the ripple content in the drive system. Expressions forms ripple current are developed with different PWM variants. The efficacy of the proposed analytical approaches to predict the current trajectory and the ripple content is confirmed from the experimental results. All the PWM variants are _rst simulated using MATLAB and verified experimentally by conducting tests on a three-phase open-end winding induction motor drive controlled with volts per hertz control. The implementation of the PWM algorithms only requires instantaneous magnitudes of three-phase reference voltages and completely avoids the sector identification and lookup tables. A dual two-level volt-age source inverter (VSI) can synthesize a three-level voltage space vector employing an open-end winding induction motor. Space-vector-based pulse width modulation(PWM) variants fort his dual VSI are proposed in this paper that over the dual advantage of limiting the switching power loss to a single VSI at all instants and also reducing the switching commutation sin the dual VSI by 50%. [2].

“Two-quadrant Clamping Inverter Scheme for Three level Open-end Winding Induction Motor Drive" have presented the switching pattern adopted in the present work ensures alternative clamping and switching modes every 1800 for both the inverters. In the present scheme, the zero sequence currents are denied a path by using isolated power supplies. The proposed switching strategy two-quadrant clamping of the inverter which results in lowering of the losses that occurring power electronic switches. Simulation stud-ies have been carried out for the proposed SVPWM strategy using MATLAB/ Simulink .A space-vector based pulse width modulation(SVPWM) scheme for a three-level dual- inverter- fed open-end winding induction motor drive. The proposed method introduces clamping of one inverter for 1800 span of the rotation of the reference space vector. The proposed scheme neither requires sector identification nor look up tables for the generation of the gating pulses. [3]

"Discontinuous Decoupled PWMs for Reduced Current Ripple in a Dual Two-Level Inverter Fed Open-End Winding Induction Motor Drive" This paper presents Analytical expressions for ripple content in the motor phase current are developed and a current trajectory is theoretically obtained directly from the switching states of the dual inverter in a stationary reference frame. In addition, this paper also describes a current ripple trajectory in the motor by exploring the freedom independently operating the individual inverters with different PWMs. Investigations on current ripple in a dual 2-level inverter feeding an open-end winding induction motor drive. Pulse width modulations (PWMs) for the independently controlled inverters are implemented using a simple effective time placement affected by offset-time concept, thus, eliminating the use of sector identification and lookup tables. [4]

"Dual-Space Vector Control of Open-End Winding Permanent Magnet Synchronous Motor Drive Fed by Dual Inverter" have presented Zero-sequence current in open-end winding ac motor drives is usually caused by the zero-sequence voltage, and therefore switching combinations which do not produce zero-sequence voltage are used to synthesize there reference voltage in existing methods. But even so, the zero-sequence voltage can also be produced by the dead time of their inverter. In order to suppress zero-sequence current in the OEW-PMSM drive, a dual-space vector control scheme is proposed and an oval dual-inverter space vector PWM(DI-SVPWM) with the zero-sequence voltage reference is employed to regulate system zero-sequence voltage. Space vector control scheme for the open-end winding permanent magnet synchronous motor (OEW-PMSM) drive fed by the dual inverter with a single DC supply. Potential zero-sequence current in the open-end winding drive system has to be considered since it causes circulating current in the winding and leads to high current stress of power semiconductor devices and high losses. [5].

"A New Alternate Fixed bias Inverter SVPWM scheme for open end winding PMSM drive." have presented a new space-vector based Pulse Width Modulation (PWM) scheme for an open-end winding induction motor drive. This PWM scheme requires two isolated power supplies and uses instantaneous phase reference voltages. The circuit configuration requires two isolated power supplies for the dual inverter fed open end winding induction motor drive. By exploiting the rich switching redundancy that is offered by the circuit configuration, all the active states are used in clamping the inverters. The proposed scheme is simulated using MATLAB/Simulink platform.[6]

"Dual voltage DC generator for compact light-weight ship electrical systems" have presented The two rectifiers are controlled to create a medium-voltage dc bus to feed the propulsion and pulsed weapon loads, and a low voltage DC bus for ship service needs. This architecture derives appropriate voltages for the propulsion and ship service loads from the shared generator while completely eliminating the need for transformers. This paper presents the voltage regulation technique for both medium-voltage and low voltage dc buses. It also discusses the fault management strategy. This paper proposes a dual voltage DC (DVDC) generation architecture for Integrated Power System (IPS) able to provide substantial size and weight reductions. The system uses an open-winding synchronous generator with a medium voltage (MV) active recti_er placed at one end and a low voltage (LV) active recti_er at the other. [7]

"A double ended inverter system for the combined propulsion and energy management functions in hybrid vehicles with energy storage" have presented This paper proposes a double-ended inverter for hybrid vehicles with energy storage. The double-ended inverter consists of two electrically isolated three-phase inverters connected to each end of an open end-winding ac motor. By controlling the individual inverter voltages, it is shown to be possible to simultaneously control both the motor output power and energy flow between the two inverters. [8]

"Dual space vector control of open-end winding permanent magnet synchronous motor drive fed by dual inverter" have presented Zero-sequence current in open-end winding ac motor drives is usually caused by the zero-sequence voltage, and therefore switching combinations which do not produce zero-sequence voltage are used to synthesize the reference voltage in existing methods. But even so, the zero-sequence voltage can also be produced by the dead time of the inverter. In order to suppress zero-sequence current in the OEW-PMSM drive, a dual-space vector control scheme is proposed and a novel dual-inverter space vector PWM (DI-SVPWM) with the zero-sequence voltage reference is employed to regulate system zero-sequence voltage in this paper. Compared with existing dual inverter PWM strategies, the novel algorithm build a regulation mechanism for the zero-sequence voltage. The proposed method is compared with the conventional vector control by simulations and experiments, and the results shown that the proposed scheme can suppress zero-sequence current effectively. This paper proposes a dual-space vector control scheme for the open-end winding permanent magnet synchronous motor (OEW-PMSM) drive fed by the dual inverter with a single DC supply. [9]

III. PROBLEM IDENTIFICATION AND METHODOLOGY

- Problem Identification-:

High power non-linear and time varying loads, such as rectifiers, office equipment's like computers and printers, and also adjustable speed drives cause undesirable phenomena in the operation of power systems like harmonic pollution and reactive power demand. The highly nonlinear currents drawn especially by high-power single-phase rectify er loads greatly distort the outputs of Nonlinear Loads. So the permanent magnet synchronous motor drive fed by the dual inverter with dc supply is used. Potential zero sequence current in the open end winding drive system has to be considered since it causes circulating current in the winding and leads to high current stress of power semiconductor devices and high losses. Zero sequence switching combinations do not produce zero sequence voltage are used to synthesize the reference voltage in existing method. In order to suppress zero sequence current in the open end winding Nonlinear Loads drive unified SVPWM is used. In addition the total switching frequency reduced by 1/3 of that of the dual SVPWM. In addition the alternate inverter PWM is used to reduce the total harmonic distortion in power electronic drive.

- Methodology

- Unified SVPWM

The configuration of a dual two-level inverter system with two isolated dc voltage source Vdc1 Vdc2 is shown in _g. where the ratio of two isolated DC voltage sources DC voltages, k=Vdc1 /Vdc2 , is an arbitrary positive value. The relationship between the reference voltage vector Vs and the vector outputs of the dual inverter Vinv1 and Vinv2 is represented as:

Vs = Vinv1 - Vinv2-----1

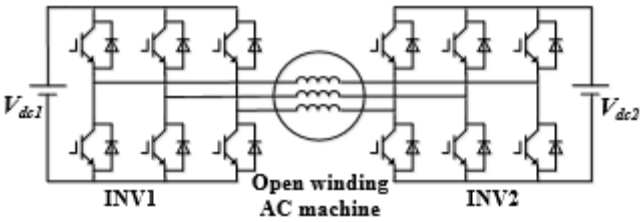

Figure 1: Configuration of dual inverter with two isolated DC sources

For the classical SVPWM, two nonzero active voltage vectors are adopted in the synthesis process. To simulate the process in the dual-inverter system, a unified SVPWM algorithm.

IV. PWM SCHEME

The open-end winding PMSM drive fed by the dual inverter is depicted in fig.The neutral point of motor windings is opened, and two inverter feed the windings from each end. The DC links of the two inverters can be isolated or connected together, as shown in fig 2(a) and (b) respectively, As to the dual inverter with isolated DC link dual inverter, the circuit can be reduced since only a single DC power supply is needed. But unfortunately, the DC bus can provide a potential path for the zero-sequence current. So,this paper mainly discusses the open-end winding PMSM drive fed by the common DC-Link dual inverter

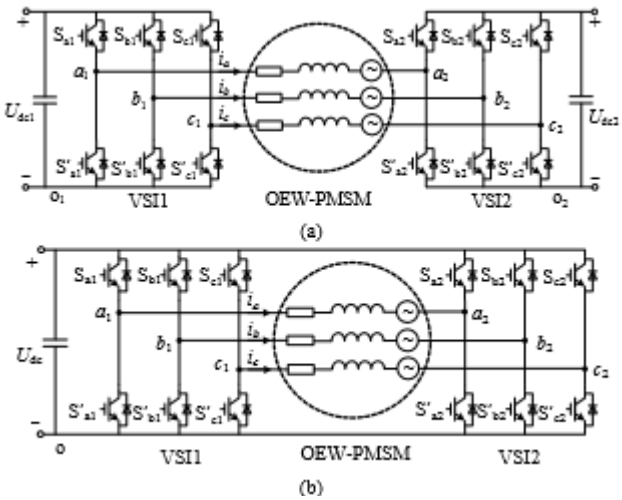

Figure 2: The open-end winding PMSM fed by dual inverter. (a) with isolated DC link, and (b) with common DC link

Model of open-end winding PMSM Each phase model of a PMSM can be construct by a resistance, an inductance and the EMF in series. For a nonsalient open-end winding PMSM, the equivalent circuit is shown in Fig. 2, in which the model for each phase is the same with that of the star-connected motor.

- **PWM Scheme**

In this work, the space-vector-based PWM scheme presented for the conventional two-level inverter is extended for the dual-inverter scheme. The switching timings for the switching inverter are calculated, which depend only on the instantaneous phase reference voltages. The clamping states of the clamping inverter (be it inverter-1 or inverter-2) also depend on the instantaneous phase reference voltages. Thus the inverters change their roles as clamping and switching inverters depending on the SHC for every 360 of the cycle.

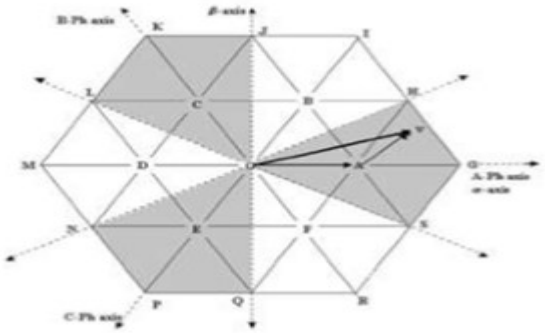

Figure 3: Principle of alternate PWM strategy

It is important to note that the clamping state of the clamping inverter and also the switching times of the switching inverter are dependent entirely on the instantaneous three-phase reference voltages

CONCLUSION

Simulink models for two techniques have been developed and tested in the MAT-LAB/SIMULINK environment. Their simulation results are compared for nonlinear loads and analyzed by computing their total harmonic distortion (THD).It has been observed that Unified SVPWM is better in reducing harmonics in non-linear load. The current distortion is analysed for different switching frequencies. It has been observed that Unified Space vector is better in reducing THD as compared to Alternate Inverter pulse width modulation for a wide speed range.

REFERENCE

1. C. Patel, R. P. P., A. Dey, R. Ramchand, K. Gopakumar and M. P. Kazmierkowski,"Fast direct torque control of an open-end induction motor drive using 12-sided polygonal voltage space vectors," IEEE Trans. Power Electronics, vol. 27, no. 1, pp. 400-410, Jan.2012.
2. S.Srinivas and K. R. Sekhar, "Theoretical and experimental analysis for current in a dual-inverter fed open-End winding induction motor drive with reduced switching PWM," IEEE Trans. Ind. Electronics, vol. 60, no. 10, pp.4318-4328, Oct.2013.
3. 3.S.Pradabane, B. L. Narasimharaju and N. V. Srikanth, \Two-quadrant clamping in-verter scheme for three-level open-end winding induction motor drive," Power Electron.,Drives and Energy System. (PEDES), 2014 IEEE Int. Conference. on, Mumbai, 2014,pp. 1-4.
4. 4.K. R. Sekhar and S. Srinivas, "Discontinuous decoupled PWMs for reduced current ripple in a dual two-level inverter fed open-end winding induction motor drive," IEEE Trans. Power Electron., vol. 28, no. 5, pp. 2493-2502, May. 2013.
5. Q. An, J. Liu, Z. Peng, L. Sun and L. Sun, \Dual space vector control of open- end winding permanent magnet synchronous motor drive fed by dual inverter," IEEE Transaction. Power Electron., doi:10.1109/TPEL.2016.2520999.
6. 6.Srinivasan Pradabane, N.V. Srikanth, B.L. Narasimharaju, "A new alternate Fixed-bias inverter SVPWM scheme for open-end winding induction motor drive", International Review of Electrical Engineering, Vol. 9, No. 1, pp. 1 - 6, Feb 2014.
7. 7.R. Zhou, R. Raju and L. Garces, "Dual voltage DC generator for compact light-weight ship electrical systems," 2011 IEEE Electrical Ship Technologies Symposium, Alexandria,VA, 2011, pp. 382-387.
8. 8.B. A. Welchko, \A double-ended inverter system for the combined propulsion and energy management functions in hybrid vehicles with energy storage," 31st Annual Conference of IEEE Industrial Electronics Society, 2005. IECON 2005, Raleigh, NC, 2005,pp. 6 pp. 1401-1406.
9. Q. An, J. Liu, Z. Peng, L. Sun and L. Sun, "Dual space vector control of open- end winding permanent magnet synchronous motor drive fed by dual inverter," IEEE Transaction. Power Electron., doi:10.1109/TPEL.2016.2520999.
10. Nin chen and dansen, \A Uni_ed Space Vector Pulse Width Modulation for Dual two level inverter System", IEEE Transaction, 2016.
11. H. Nian, Y. Zhou and H. Zeng "Zero-sequence current suppression strategy for open winding PMSG fed by semicontrolled converter," IEEE Trans. Power Electronics, vol.31, no. 1, pp. 711-720, Jan. 2016.
12. J.Hong, H. Lee and K. Nam, "Charging method for the secondary battery in dual-inverter drive systems for electric vehicles," IEEE Trans. Power Electronics, vol. 30, no. 2, pp. 909-921, Feb. 2015.
13. 13.Srinivasan Pradabane, N.V. Srikanth, B.L. Narasimharaju, "A new alternate Fixed-bias inverter SVPWM scheme for open-end winding induction motor drive", International Review of Electrical Engineering, Vol. 9, No. 1, pp. 1 - 6, Feb 2014.
14. V. T. Somasekhar, S. Srinivas and K. K. Kumar, "Effect of zero-vector placement in a dual-inverter fed open-end winding induction motor drive with alternate sub-hexagonal center PWM switching scheme," IEEE Transaction. Power Electronics, vol.23, no. 3, pp.1584-1591, May 2008.
15. P. C. Loh,, D. G. Holmes, T. A. Lipo. \Implementation and Control of Distributed PWM Cascaded Multilevel Inverters With Minimal Harmonic Distortion and Common-Mode Voltage". IEEE TRANS. Power Electron., Vol. 20, No.1, pp 90-99 January 2005.
16. V. T. Somasekhar, S. Srinivas and K. Gopakkumar, "A space vector based PWM switching scheme for the reduction of common-mode voltages for a dual inverter fed open-end winding induction motor drive," Power Electronics. Specialists Conference,2005. PESC '05. IEEE 36th, 2005, pp. 816-821.